DiMAX® 1203B Digital Booster

Digital Booster 3 x 4 Amps for NMRA compatible model railroads

Item No.: 8141001
Version 1.00 – 12/07

Index

		Page
I.	General Description	2
II.	Summary of Functions	2
III.	Layout of Terminals	2
1	**Please read this first!**	3
1.1	**Safety Details and Warnings**	3
1.2	**Warranties and Guaranties**	4
1.3	**Warranty Claims**	4
1.4	**Service and Customer Support**	4
2	Scope of Supply	4
3	Getting started	5
3.1	Hook Up	5
3.2	Power Supply	6
3.3	Fuse	7
3.4	Track Hook Up	7
3.5	Hook Up of Control Components	8
3.6	Hook Up with a DiMAX®, LGB® or Lenz® Central Station (or compatible)	8
3.7	LED Status Indications and Control Panel	10
4	The First Switch-On	11
4.1	Changing the Modes of Operation	11
4.2	Overvoltage Protection	11
4.3	Overload Protection	11
4.4	Loss of Signal from the Central Station	11
4.5	Adjustment of the Output Voltage	11
5	Operational Mode 1 (Booster)	12
5.1	Connecting the Outputs in Parallel	13
5.2	Operational Mode 2 (Booster with Reverse Loop Function)	14
5.3	Operational Mode 3 (Booster with Braking Function)	15
5.4	Special Function with Slow Speed in Operational Mode 3	16
6	Operation with Central-Navigator	17
6.1	Operation with Lenz® Central Stations	18
6.1.1	Operation with other Central Stations	19
7	Glossar	20
8	Technical Specifications	23
9	Manufacturer Information	23

Please read this Manual thoroughly before operating your DiMAX Digital Booster

I. General Description

The DiMAX® 1203B Digital Booster is based on the same technical specifications as the DiMAX® 1200Z central station. The DiMAX 1203B features 3 discrete output amplifier stages which deliver 10 Amps permanently (12 Amps in peaks) depending on the setting and the operational mode. An overload protection and a temperature controlled fan are integrated. The DiMAX 1203B Digital Booster provides 3 operational modes: booster, booster with a reverse loop function, and booster with a braking function. In addition the DiMAX 1203 is independant of any digital protocol which makes it usable with NMRA compatible systems or any other digital system.

II. Summary of Functions

Features of the DiMAX® 1203B Digital Booster:

- **3 x 4 Amps max. driving current** (continuous max. 10 Amps)
- **External power supply from 12V AC to 18V AC or 12 V DC to 24 V DC resp. 230VA**
- **Voltage limitation** (track voltage is limited to 23.5 V if powered by DC supply)
- **Adjustible output voltage** from 14V to 22 V (if powered by AC supply)
- **Integrated fan** (temperature controlled)
- **3 stage LED status indication per channel**
- **NMRA DCC compatible**
- **LGB® MZS compatible**
- **Booster interface**
- **Lenz® CDE interface**
- **Central-Navigator interface (see note page 2)**

III. Layout of Terminals:

- **External power supply: 12V AC to 18V AC or 12 V DC to 24 V DC resp. 230VA** (fused separately)
- **2 Terminals for Central-Navigators** (front panel, not yet activated, see note page 2)
- **3 x Track power connector** (rear panel)
- **2x Booster interface** (rear panel)
- **Lenz® CDE interface** (rear panel)

The number of DiMAX® bus connectors for handheld controllers, RC receiver, feedback module, train detection module etc. may be expanded at any time by using an additional DiMAX adapter (Item No. 8138001).

Note: This manual mentions a Central-Navigator. This item will be available in fall 2008 and is designed only for smaller scales like HO and N. The Central-Navigator is not usable for G-Gauge.

1 Please read this chapter thoroughly before starting the operation!

1.1 Safety Details and Warnings

1.1.1 This Product is not suitable for children under the age of 8 years. This product may have sharp edges. Inappropriate handling may cause injuries. Operate this product **only** with products posted in this manual. Measurements and electrical specifications are subject to change without further notice.

1.1.2 The DiMAX® 1203B Digital Booster may only be used for the operation of digitally controlled model railroads. Do never connect the bus connectors to your telephone line! This will result in irreparable and costly damages.

1.1.3 The DiMAX® 1203B Digital Booster may only be operated with digital components posted in this manual. Even if other devices may have the same connectors, an operation will not be possible and may result in damage of the DiMAX® 1203B Digital Booster and other components.

1.1.4 Do not drop this product. Do not expose the DiMAX® 1203B Digital Booster to shocks and do not shake it. This may result in damage.

1.1.5 Do not expose the DiMAX® 1203B Digital Booster to direct heat, sunlight or a damp environment. This may affect the operation.

1.1.6 Do not open the DiMAX® 1203B Digital Booster. There are no user-serviceable components inside. This will void your warranty and may result in damage.

1.1.7 Do not clean the DiMAX® 1203B Digital Booster with abrasive cleaners, strong acids or corrosive cleaners. Use a plastic-compatible cleaner or dry soft cloth only.

1.1.8 We stress the fact that this product is not a toy. Do never leave your children unattended when operating the DiMAX® 1203B Digital Booster. Children should operate this item only under supervision of adults.

1.1.9 Never use analog transformers on the same track with digital components. This goes for the operation of catenary lines also.

1.1.10 Keep the ventilation grilles free of obstructions. These vents are needed for cooling the DiMAX® 1203B Digital Booster. Do not pour any liquids into these grilles; keep the DiMAX® 1203B Digital Booster in a dry environment.

1.1.11 Visually inspect your digital components regularly, remove damaged items immediately.

1.1.12 The right to change this product in accordance with technical progress is reserved by MASSOTH ELEKTRONIK, Seeheim, Germany. We can not compensate for damages resulting from inappropriate handling, non-observance of this manual, operation with altered or damaged items or items not suitable for the DiMAX® 1203B Digital Booster. We do not compensate for damages resulting from overheating or moisture and inappropriate opening of the housing.

1.1.13 Removing the safety label voids your warranty instantly and irrevocably.

1.2 Warranties and Guaranties

MASSOTH ELECTRONICS USA warrants this product for 1 year from the original date of purchase. This product is warranted against defects in materials and workmanship. Peripheral component damage is not covered by this warranty. Normal wear and tear, consumer modifications as well as inappropriate use and handling are not covered. Errors and changes excepted.

1.3 Warranty Claims

Valid warranty claims will be serviced without charge within the warranty period. To initiate a warranty claim, please contact your dealer or MASSOTH ELECTRONICS USA for an RMA (Return Merchandise Authorization). MASSOTH ELECTRONICS USA cannot be responsible for return shipping charges to our repair facility. Please include your Proof of Purchase with the returned goods.

1.4 Service and Customer Support

For support and technical questions contact: sales@massoth.com or call (see below).

For downloading the latest firmware update go to: www.massoth.com.

Further support is available through your retailer or via the Massoth USA Hotline.

Hotline hours (USA): 9:00 a.m. to 4:00 p.m. EST Monday thru Friday

Massoth Electronics USA, LLC
6585 Remington Dr.
Cumming, GA 30040

Ph. 770-886-6670

Fax 770-889-6837

2. Scope of Supply

- **DiMAX® 1203B Digital Booster**
- **Multi-Connector** for power hook-up
- **3 x Track power connector**
- **1 x Lenz® CDE connector**
- **1 x Booster interface cable**
- **Manual**

In case any of these items is missing or damaged contact your local dealer or the manufacturer.

Note: Please keep your box and the Styrofoam parts, to ensure proper packaging in case of shipping. If dropped, the DiMAX® 1203B Digital Booster can be damaged significantly.

3. Getting started

The following chapter describes the hook-up and the first operation of the DiMAX® 1203B Digital Booster.

3.1 Hook Up

Place the DiMAX® 1203B Digital Booster in an appropriate place. The DiMAX® 1203B Digital Booster should not be placed close to a radiator, any heating device or in direct sunlight. At all times ensure sufficient ventilation and a proper temperature range for the DiMAX® 1203B Digital Booster.

The ventilation outlet is on the rear panel and it should be kept clear of any obstructions at all times.

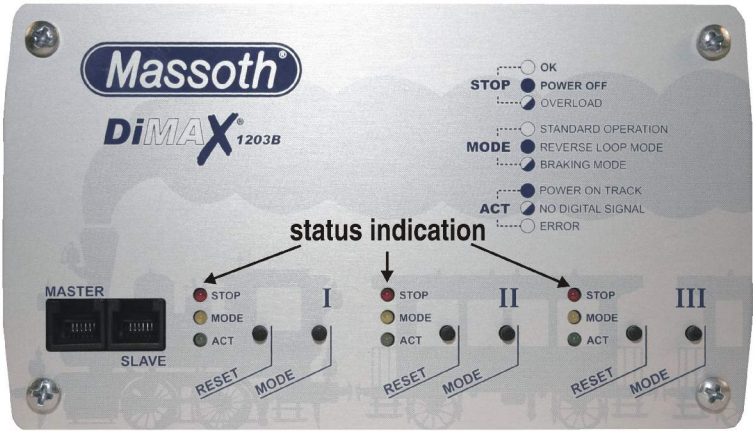

Central-Navigator Interface | Channel 1 | Channel 2 | Channel 3

Control Panel

Illustration 1: The front panel of the DiMAX® 1203B Digital Booster

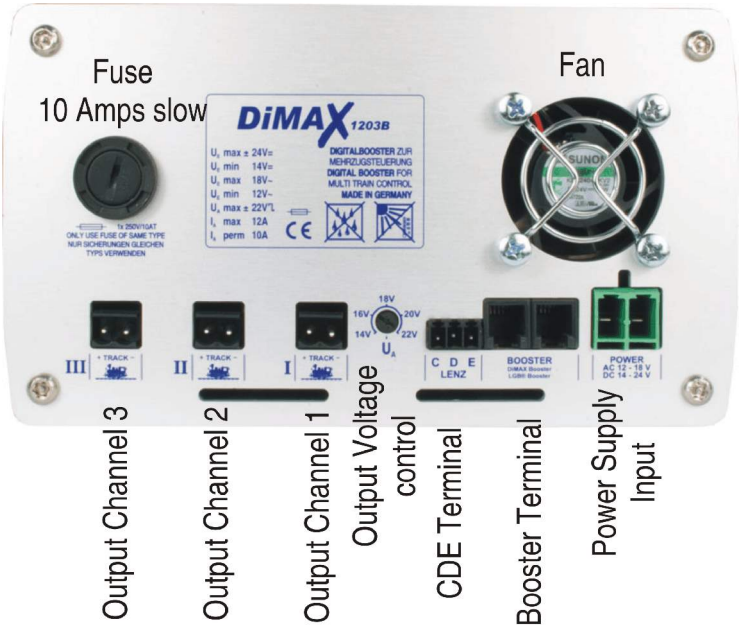

Illustration 2: The rear panel of the DiMAX® 1203B Digital Booster

3.2 Power Supply

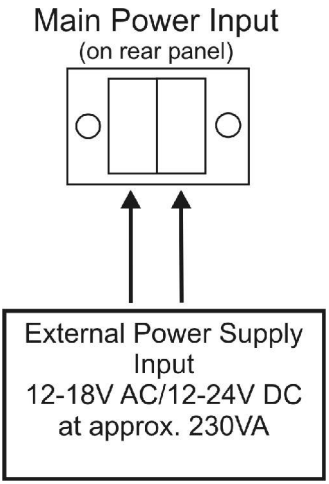

Illustration 3: Power Terminal

Connect the power supply cables to the green 2-pole connector with a regular screw driver and insert the connector into the main power socket on the rear panel of the DiMAX 1203B Digital Booster (as shown in illustration 3). **Do not tin the cables!** Utilize core cable ends or twist the cables well before tightening the mounting screws.

3.3 Fuse

The DiMAX® 1203B Digital Booster is powered by an external power supply (transformer, switching power unit, battery). The power supply input is fused with a separate fuse on the rear panel of the DiMAX® 1203B Digital Booster (see illustration 2).
A 10 Amp slow-blow fuse must be used.

3.4 Track Hook Up

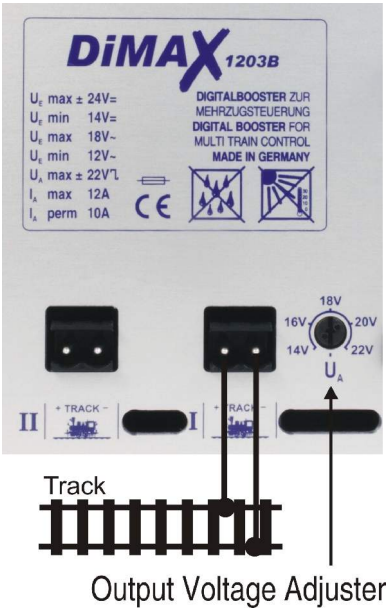

Illustration 4: Track hook-up and Voltage control

The DiMAX® 1203B Digital Booster features 3 power outputs which may be connected in parallel. For the first test operation connect output #1 to the track. Parallel operation is explained later in Chapter 5.1.
Connect your track power cable to the black 2-pole terminal. Mind the correct polarity. **Do not tin the cables!** Utilize core cable ends or twist the cables well before tightening the mounting screws.

3.5 Hook up of Control Components

The DiMAX® 1203B Digital Booster features two terminals on the front panel. These terminals may be utilized to connect a Central Navigator (see note page 2), DiMAX bus components as e.g. feedback module, train detector, or the DiMAX transducer to the DiMAX® 1203B Digital Booster. The DiMAX transducer will enable you to use LGB MTS II components with the DiMAX system.

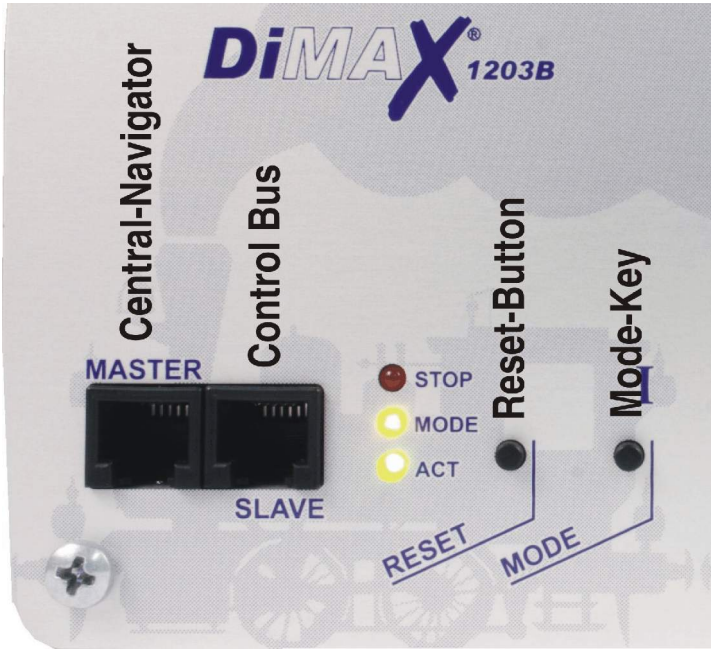

Illustration 5: Control Bus Terminals and Reset/Mode-Keys

The Master terminal is reserved for the Central-Navigator (see note page 2) only!
The Slave terminal may be used as a regular control bus terminal for DiMAX components.

> These terminals may only be used for the operation of a Central-Navigator (see note page 2) in conjunction with DiMAX components!
> A regular Navigator does not work, when connected to this jack!

3.6 Hook Up with a DiMAX®, LGB® oder Lenz® central station (or compatible)

The rear panel (Illustr. 2) provides two options for connecting bus components.
The DiMAX® 1203 Booster may be connected to a Lenz® central station (or compatible) with the 3-pole Lenz® CDE jack.

See the manual of your central station for the correct wiring!
The DiMAX® 1203 Booster connects to a DiMAX® or LGB® central station (MTS II or III) via the 4-pole booster bus terminal. Utilize the booster interface cable to hook up the booster to the central station.

3.7 LED Status Indications and Control Panel

The LED indicators show the status of the operation and the actual status of the layout. There are three LED indicators provided per channel. Illustration 6 shows all the variations of indications possible:

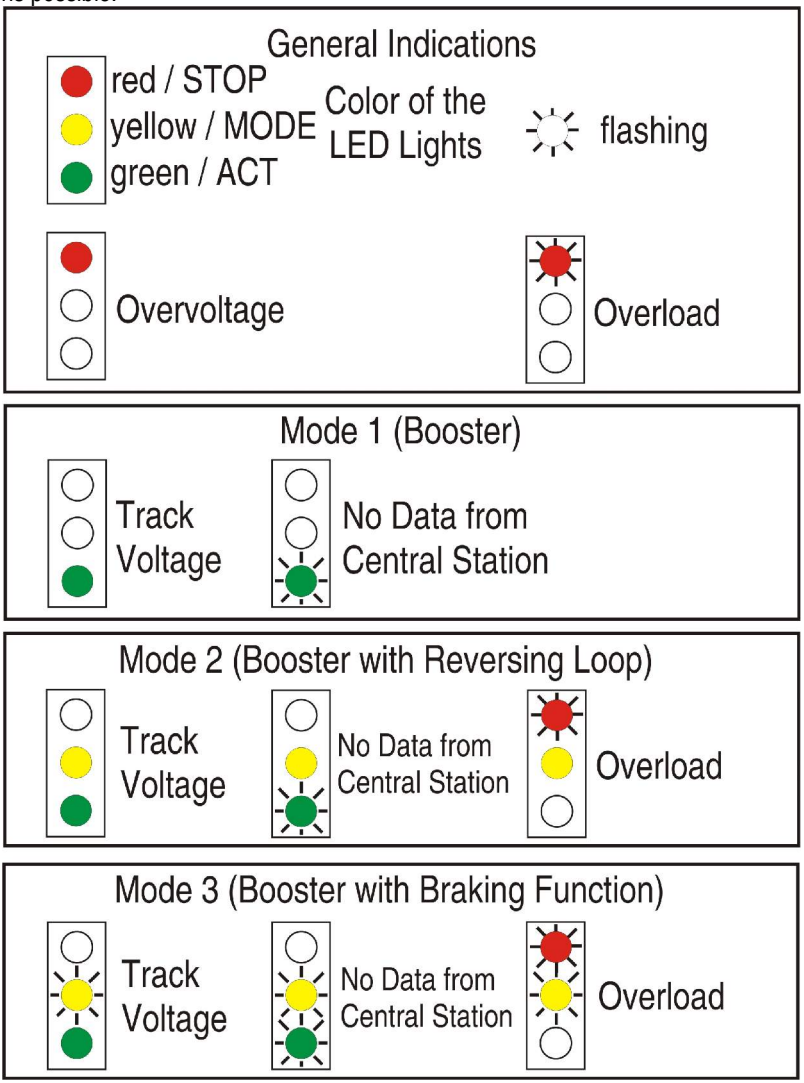

Illustration 6: LED Status Indications

The respective modes are explained in chapter 5.

4. The First Switch-On

In case you use the DiMAX® 1203 Booster with a central station, **the central station must be switched on first.**
Switch on the power supply for the DiMAX® 1203 Booster.
After the power up the LED indicators switch from red to green. The lower green LEDs will be illuminated provided the central station is not in the emergency stop mode and the booster is connected correctly to the central station.
This shows that the data transfer to the central station is established.

4.1 Changing the Operation Modes

Keep the mode key depressed while pushing the reset button once. Then release both buttons.
The respective channel will change to the next mode.
The sequence is: booster - booster with reversing loop - booster with braking function.

4.2 Overvoltage Protection

The overvoltage protection of the DiMAX® 1203 Booster has been activated if all three red top LEDs are illuminated. In this case the supply voltage is too high, and the booster switches off for safety reasons. Make sure to operate the DiMAX® 1203 Booster within the specifications. Disconnect the DiMAX® 1203 Booster briefly from the power source to reset the system.

4.3 Overload Protection

In case one or more channels are showing a flashing red LED, the respective channel has been switched off due to high amperage. Make sure to eliminate the cause of this failure and reset the faulty channel by depressing the RESET button for about 2 seconds.

4.4 Loss of Signal from the Central Station

Flashing green LEDs indicate that the data connection to the central station is faulty. Check the booster cable from the central station to the DiMAX® 1203 Booster respectively the connection from the booster to the Central-Navigator (see note page 2).

4.5 Adjustment of the Output Voltage

The voltage regulator on the rear panel regulates the output voltage of all outputs from 14Volts to 22Volts.
This regulator works only if the input voltage is AC!

5. Operation Mode 1 (Booster)

In this mode the DiMAX® 1203 Booster works as a regular booster (Illustr. 7). In lieu of the 800Z you may use a DiMAX® 1210Z, a DiMAX® 1200Z, LGB® MTS II or III. The hook-up of a Lenz® (or compatible) central station is shown in chapter 6.1.

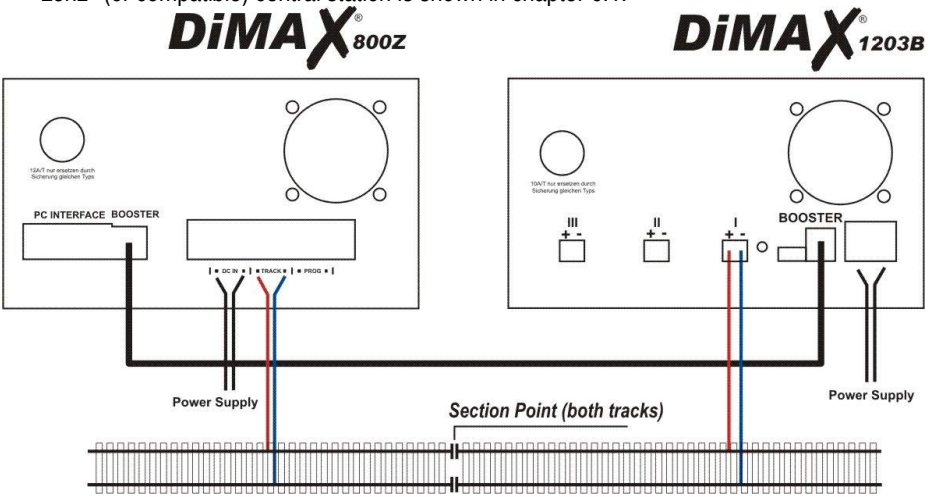

Illustration 7: Wiring diagram in mode 1 with 1 output

In case two or three outputs are used in the same layout, connect the outputs according to illustration 8. **Make sure the outputs are connected to the track in the same polarity: always connect output – to track – and output + to track +.**

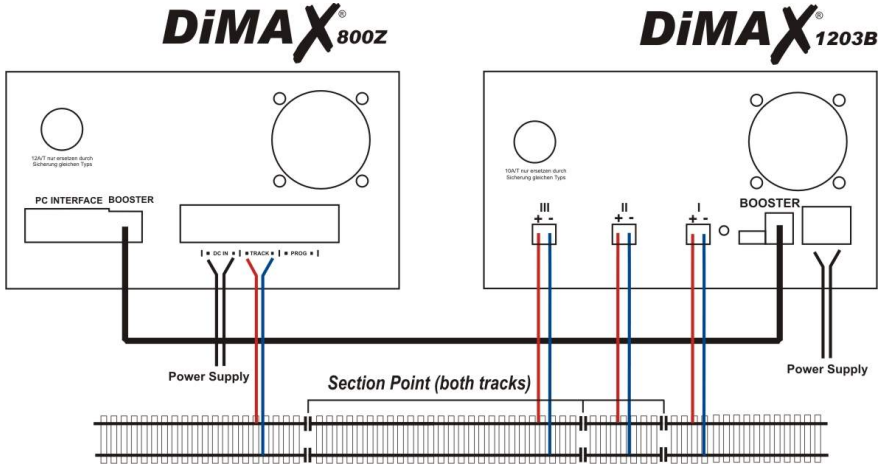

Illustration 8: Wiring Diagram Mode 1 utilizing 3 outputs

5.1 Connecting the outputs in parallel

Parallel use of output channels is only possible in Mode 1 (Booster) !
You may connect 2 or 3 output channels in parallel to increase the output Amperage. Combining two outputs delivers 7 Amps continuously, three outputs deliver approx. 10 Amps continuously.
Important: The channels need to be connected in the same polarity! Otherwise components connected to the DiMAX 1203B might be damaged or destroyed as well as the booster itself.
The wiring diagram is shown in illustration 9.

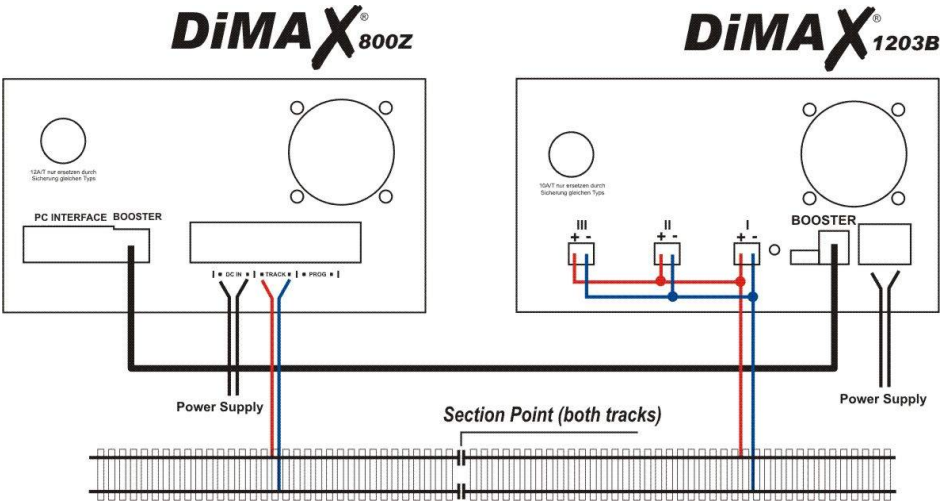

Illustration 9: Wiring diagram for parallel operation of 3 channels in mode 1

The section points may be crossed without hesitation operating DiMAX® or MZS II resp.III central stations in connection with the DiMAX® 1203B booster.

5.2 Operation Mode 2 (Booster reversing loop automation)

In mode 2 the DiMAX® 1203B Booster is operating as a reversing loop module. Illustration 10 shows a typical wiring diagram. In this setup channel 1 is working in mode 2 (reversing loop) and channel 2 is working in mode 1 (booster).

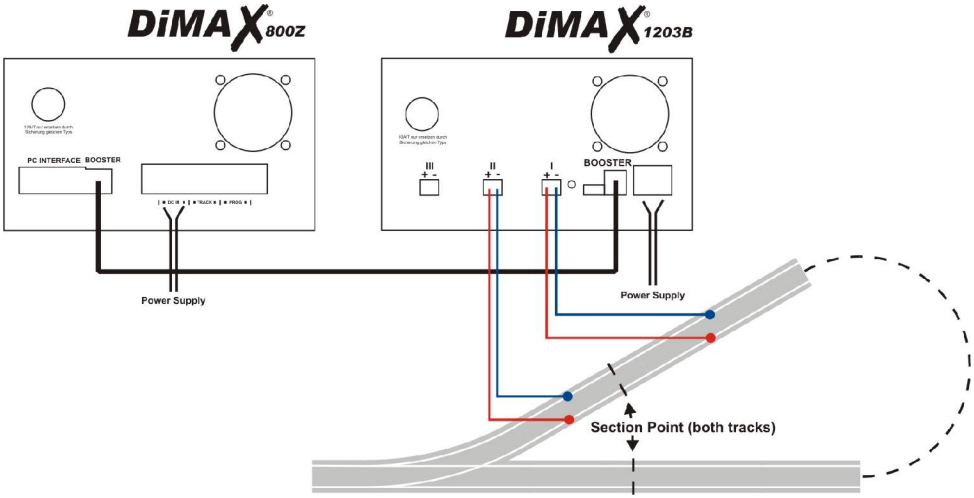

Illustration 10: Wiring diagram with mode 2 (reversing loop)

5.3 Operation Mode 3 (Booster with braking function)

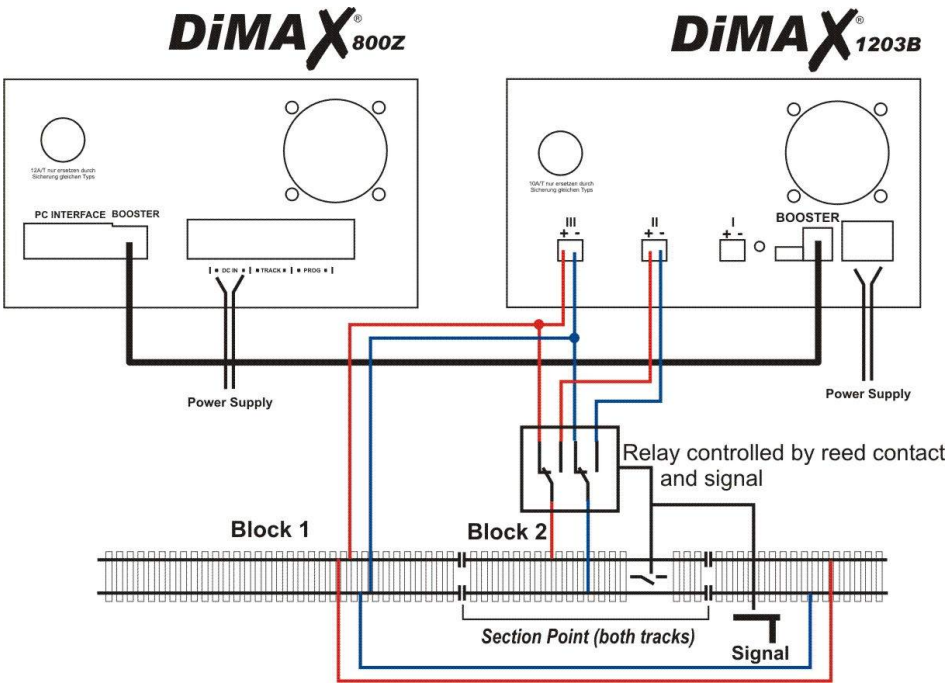

Illustration 11: Wiring diagram with mode 3 (braking function)

Mode 3 features a brake and stop function. Illustration 12 shows the typical setup. A patented controlling process facilitates the use of all loco functions while the train is in the braking section. Only the speed is controlled by the DiMAX® 1203B booster. In this setup channel 3 is working in mode 1 (booster) whereas channel 2 is working in mode 3 (brake and stop function).

In case the signal shows “GO“ the first and second block is supplied with power by channel 3, the train will pass through.

In case the signal shows “STOP“ the relay switches over when the train passes the track contact. Block 1 will be powered by channel 3 and block 2 will be powered by channel 2. The train will stop after it passed the track contact. If the signal is changed to “GO“ the relay switches back to channel 3 and the train starts running again.

5.4 Special Function “Slow Speed“ in Mode 3

You may also set up a slow speed section with the DiMAX® 1203 Booster.
See the wiring diagram and setup in illustration 13.

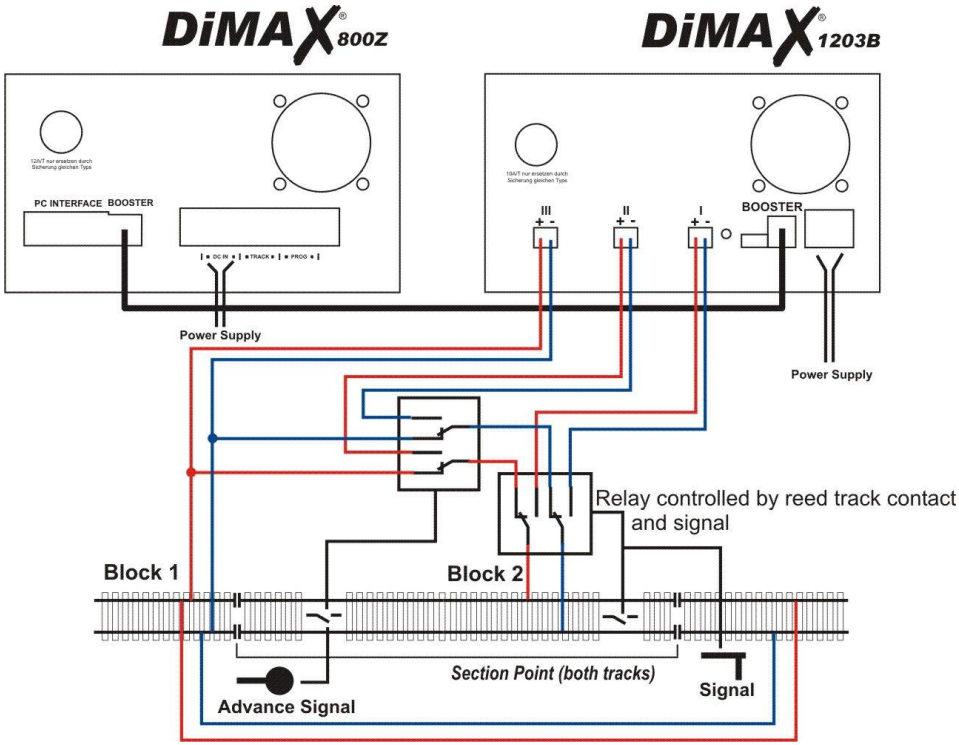

Illustration 12: Wiring Diagram in Mode 3 with slow speed section and stop function

Channel 3 operates in mode 1 (booster), channel 2 works in mode 3 (braking function “slow speed“) and channel 1 works in mode 3 (braking function “stop“).
First, the speed for channel 2 must be set at the DiMAX® 1203 Booster. Set the warning signal (advance signal) and let the train run into this section. The speed of the train is set by pressing the mode button of channel 2 repeatedly. The speed changes in 14 steps to “0“ and starts again with “14“. The LED of channel 2 will flash according to the speed setting: fast for high speed, slow for slower speeds.
The set up in illustration 13 works as follows:
In case the warning signal (advance signal) is not set and the following signal shows “GO“ the train will pass this section in normal speed. The train is powered by channel 3.
In case the warning signal is set and the following signal shows “STOP“ , the train will pass

the warning signal and trigger the first track contact. This contact operates the first relay which changes the power supply of block 2 to channel 2 and the train changes subsequently to slow speed accordingly. After passing the second track contact the second relay is switched and block 2 is powered by channel 1 which will stop the train as channel 1 is working in the stop function. In case the main signal is changed to “GO“ the train will assume normal speed and continue.

With mode 3 you may also implement slow speed sections (track construction sites) or sections with steep down-grades.
You may find detailed examples on our home page http://www.massoth.com

6. Operation with the Central-Navigator (see note page 2)

You may connect a Central Navigator to the DiMAX® 1203 Booster.
Important: In this case the booster and CDE interface must not be used!
Connect the Central-Navigator (see note page 2) to the Master plug (you may connect a DiMAX® RC receiver to this port and operate the Central-Navigator (see note page 2) wireless).
The Slave port is usable for any DiMAX® control component e.g. handheld controller, RC receiver, Feedback Module, Train Detection Module. An additional bus adapter may be needed (DiMAX® Adapter Item No. ME 8138001).

6.1 Operation with Lenz® Central Stations

Illustration 14 shows how to hook-up the DiMAX® 1203 Booster to a Lenz® Central Station. Please note that the CDE cable is connected correctly!

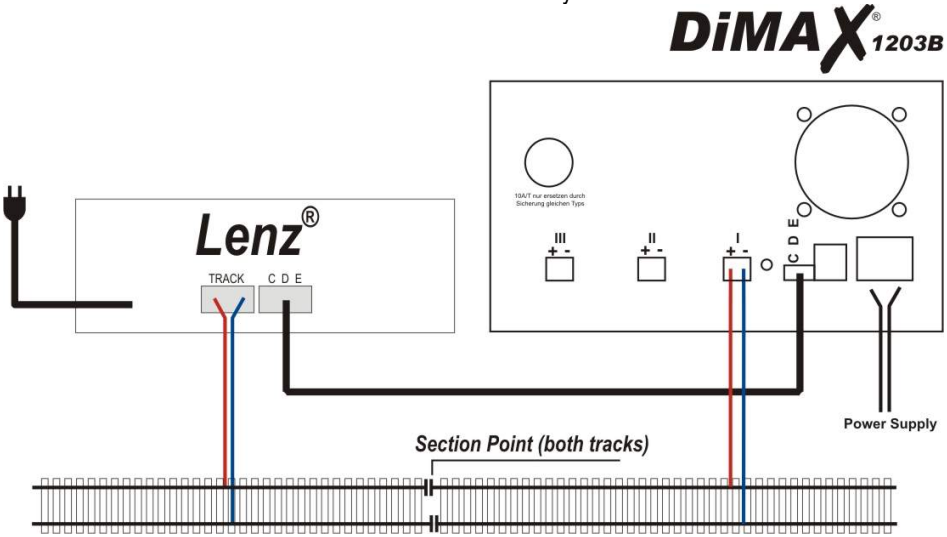

Illustration 13: Wiring Diagram in mode 1 with a Lenz® Central Station

This wiring diagram is also valid for all other central stations featuring a CDE-Interface. Depending on the type of central station it must be tested whether a passage from the booster powered section to the section powered by the central station is possible. In case one of the components is producing a short circuit, the time base of the two components is different and a passage from the booster section to the central station section is not possible.

6.2 Operation with other Central Stations

Illustration 15 shows how to hook-up the DiMAX® 1203 Booster to central stations of other manufacturers. Please note that the track power connector of the central station must never be connected to one of the outputs of the DiMAX®. Make sure that there is no connection of the booster powered track section to a track section that is powered by the central station.

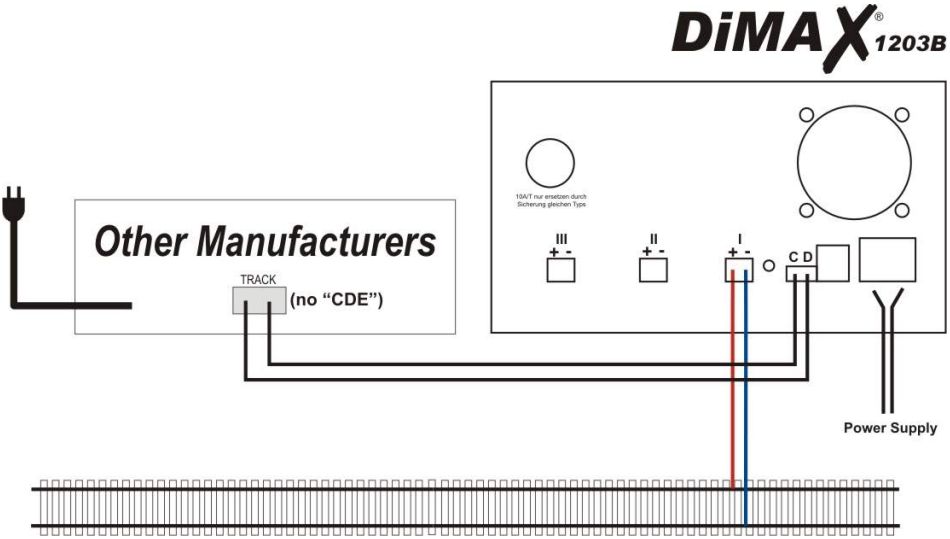

Illustration 14: Wiring Diagram in Mode 1 with Central Stations of other manufacturers

7. GLOSSAR

- **Bit**
  The word “bit” is the truncated form of the term “binary digit.” A bit is the smallest unit of digital data, having a value of either “0” or “1.” Eight bits form one “byte” of digital information.

- **Booster**
  A booster amplifies a low power DCC signal, providing additional power to the model railway. Each booster supplies a single, isolated ‘power district’ on the layout.

- **Bus / Bus system**
  A bus system is the electrical connection or data highway between control components of a DCC system. The various bus systems being currently utilized by different manufacturers are typically not compatible. For example, the bus system for Massoth components is called the DiMAX bus. The bus system for Lenz is XpressNet. The bus system for Digitrax is LocoNet. Each features a separate and distinct communication protocol.

- **Byte**
  A byte is a unit of computer information consisting of eight bits. The decimal value of a byte varies between *0* and *255*.

- **Central Station**
  The central station is the *brain* of a digital system. All commands, feedback instructions, etc., are processed in the central station. The central station generates the bi-polar DC waveform which is subsequently amplified by a DCC booster to power the track bus. The central station communicates with DCC components – cabs, wireless receivers, feedback modules, etc - via the bus system (DiMAX, LocoNet, XpressNet, etc.).

- **Computer Interface or PC Interface**
  A computer interface allows the user to connect a digital system to a computer. Typically, the interface is a 9-pin serial connector. With appropriate software, the computer can be used to control the model railway. Many advanced digital systems include an integral computer interface.

- **CV – Configuration Variable**
  DCC decoders allow the user to program various settings through the use of *configuration variables* or CVs. A CV consists of one byte (eight bits) of information and may have a value between *0* and *255*.

- **CV-Programming, Direct Mode CV Programming, (DM)**
  CV settings may be changed by a process called CV programming. Direct Mode Programming is typically conducted on an isolated, low power (current-limited) programming track section. Programming can be accomplished in *bit-by-bit mode* (allowing one of the eight bits to be altered) or in *complete byte mode* (allowing the whole byte - all eight bits – to be altered). The DiMAX system also allows the user to *read* the value of CVs.

- **DCC**
  DCC is an acronym for Digital Command Control. With DCC, a digital signal is transmitted along the rails and interpreted by devices (decoders) on the network. With NMRA DCC, the communication protocol along the rails is standardized, allowing interoperability between manufacturers. Motorola and MTH offer competing Digital Command Control systems that are not compatible with NMRA DCC. Since the central station and decoders must communicate with the same language or *protocol*, NMRA DCC is not compatible with the Maerklin (Motorola) or MTH (DCS) Digital Command Control systems.

- **Decoder**
  A decoder (switch decoder, locomotive decoder) converts the commands of the central station into the respective action (e.g. operate a switch, control a motor, control lighting outputs). Locomotive decoders receive power and instructions from the bi-polar DCC waveform transmitted along the rails.

- **Digital System**
  A digital system is an electronic control system designed to allow independent operation of multiple trains on the same track. Commands sent to mobile decoders allow the user to control motor speed and direction, as well as, the status of various function outputs for lights, smoke units, uncouplers, etc. Each locomotive or device controlled by the digital system requires a decoder that features a unique address. NMRA digital systems feature standardized communication protocol along the rails. This protocol is not compatible with the signal used by other non-NMRA DCC digital systems, e.g., Motorola (Motorola) and MTH (DCS).

- **Digital Address**
  In a digital system, each mobile decoder (locomotive decoder, function decoder) or stationary decoder (accessory decoder, switch decoder) needs a discrete, individually distinct or unique numerical address. The capability of the digital system determines the number of available addresses. Basic systems, like LGB's MTS are limited to 22 locomotive addresses and 128 switch decoder addresses. More sophisticated systems, like the Massoth DiMAX, are capable of operating up to 10,239 locomotive addresses and 2,048 switch decoder addresses.

- **MTS**
  MTS is an acronym for Multi-Train System, the digital system of LGB. While this system does not feature the NMRA Conformance Warrant, it is designed to operate according to NMRA DCC standards and recommended practices (RPs).

- **NMRA**
  NMRA is an acronym for the National Model Railroad Association. The NMRA sets standards and recommended practices for NMRA DCC systems. NMRA DCC features standardized communication protocol along the rails, offering interoperability between manufacturers. The standardization and interoperability does not extend to devices designed to operate on the bus system.

- **PoM = Programming on the Main, a.k.a. Operations Mode Programming**
  Traditional programming methods require moving the affected locomotive to an isolated programming track. *Programming on the Main* or *Operations Mode Programming* allows the user to program the decoders of locomotives still sitting on the main operating track. When using PoM, the user selects the locomotive address of the decoder he wishes to program. Typically, the locomotive address CVs cannot be changed with PoM. Please note some decoders are not compatible with PoM. Massoth eMOTION XL/XLS decoders are compatible with PoM. LGB 55020, 55021, 55022, 55027 and LGB onboard decoders are not compatible with PoM.

- **Protocol**
  Protocol is a set of conventions governing the formatting of data in an electronic communications system. In essence, the system protocol is the communication *language* spoken between devices on an electronic network.

- **Speed Steps**
  In order to control the driving speed of the locomotive motor, the central station sends *direction* and *speed step* commands to the mobile decoder. In simple terms, each speed step equates to a pre-set drive voltage for the motor. The drive voltage for each of the decoder's speed steps can be programmed by the user. The higher the number of available speed steps, the greater the resolution of motor speed control. NMRA DCC allows the central station to send 14, 28 and 128 speed step commands to mobile (locomotive) decoders. Basic decoders (e.g., LGB 55020) and central stations (e.g., LGB 55000, 55005) only support 14 speeds steps. Massoth central stations and decoders support 14, 28 and 128 speed steps.

8. Technical Specifications

Input Voltage: 12 – 18 V AC / 14 – 24 V DC
Output Voltage: max. 22V DCC / adjustable from 14 to 22V DCC (with AC input only)
Input Amperage: continuous 10 A / max. 12 A
Output Amperage operating the stages separately: continuous 3 x 3,5 A / max. 3 x 4 A
Output Amperage in parallel operation: continuous 10 A
Operating Temperature: 0°...122C°
Measurements: 170 x 100 x 245 mm
Weight: approx. 2,2 Kg

This product conforms to the CE standards

RoHS This product is manufactured according to the latest EG Standards for lead free manufacturing conforming to RoHS standard.

Please dispose of according to your State regulations.

Do not dispose of in open fire.

9. Manufacturer Information

Massoth Elektronik GmbH
Frankensteiner Str. 28
64342 Seeheim-Malchen
Germany
PH: 011-49-6151-350770
FX: 011-49-6151-3507744

Massoth Electronics USA, LLC
6585 Remington Dr., STE 200
Cumming, GA. 30040
Ph: 770 – 886 – 6670
FX: 770 – 889 – 6837

V1.0 12/07 ST

Massoth® and DiMAX® are registered trademarks by Massoth Elektronik GmbH, Seeheim, Germany. LGB® is a registered trademark and property of its respective owner. All other trademarks printed are registered trademarks as well. No parts of this work may be reproduced or transmitted in any form or by any means, electronic or mechanical, including photocopying and recording, or by any information storage or retrieval system without the prior written permission by Massoth Elektronik GmbH unless such copying is expressly permitted by federal copyright law.